White Paper

Electric Machine Design Methodology: A Revolutionary Approach

Electric machines are used in novel applications around the world, driven by the need for greater power efficiency in the transportation, aerospace and defense, and industrial automation industries. The automotive sector focuses on the need for hybrid and electric vehicle technology to meet stringent miles-per-gallon standards. The aerospace and defense industry concentrates on replacing existing aircraft power transfer technologies (such as the central hydraulic system) with fault-tolerant electric power, in which major subsystems – including engine starting, primary flight control actuation, pumps and braking – are controlled and driven electronically. In the United States' industrial sector, more than 40 million electric motors convert electricity into useful work in manufacturing operations. Industry spends over $30 billion (US) annually on electricity dedicated to electric motor-driven systems that drive pumps, fan and blower systems, and air compression.

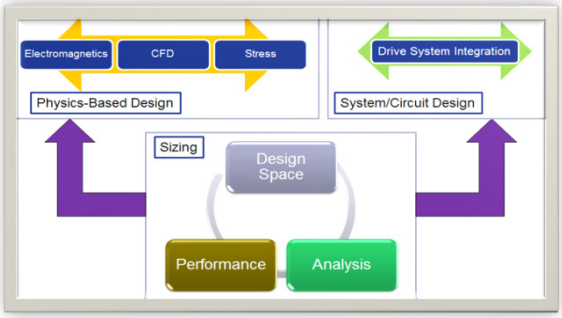

Figure 1. Multiphysics and multi-domain electric machine design flow

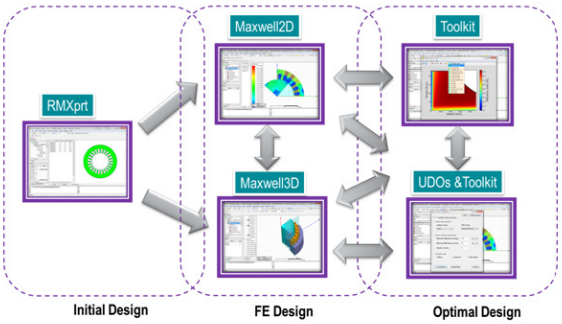

Figure 2. Optimum electromagnetics design flow

There is a clear global demand for a comprehensive design methodology to support these new applications and satisfy power efficiency requirements. Most research efforts to improve motor design have focused on the motor, rather than the motor-driven system as a whole. Engineers are forced to use a host of often incompatible simulation tools to address the various levels of motor and drive systems, leading to errors and delays in the design cycle or increased cost due to build-and-test iterations. ANSYS® multiphysics and multi-scale system engineering technology is ideal to meet these challenges.

Unique Solution

Several calculation techniques are available to predict electric machine performance, including classical closed-form analytical analysis, lumped parameter models based on determination of detailed parameters from finite element analysis, and nonlinear time-domain finite element analysis. Each method has advantages and disadvantages. Selecting the best method can be difficult because it requires the user to understand the differences among calculation methods. The fundamental issue differentiating these methods is the trade-off among model complexity, accuracy and computing time. Engineers use a combination of these calculation techniques as the optimal solution to simulate electric machine performance.

Success in using any simulation software is usability. Ease of use plays a significant role in speeding time to market, because engineers will quickly discard software that is difficult to use or requires in-depth knowledge of numerical simulation techniques. Launching a product quickly requires simulation software that serves a number of purposes: accurate and suitable for use throughout an organization at different stages of the design process by engineers with various levels of knowledge in numerical simulation.

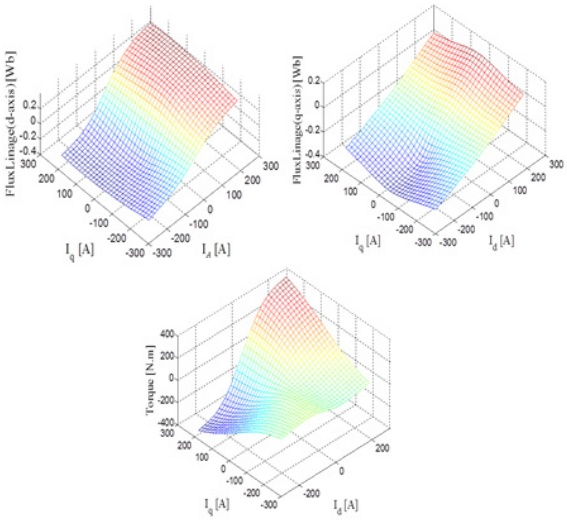

Figure 3. D-Q solution for interior permanent magnet machine design

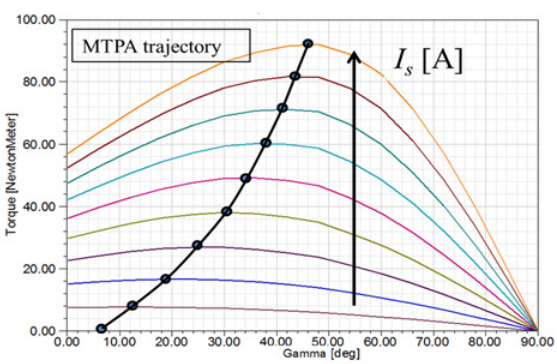

Figure 4. Maximum torque per ampere unit

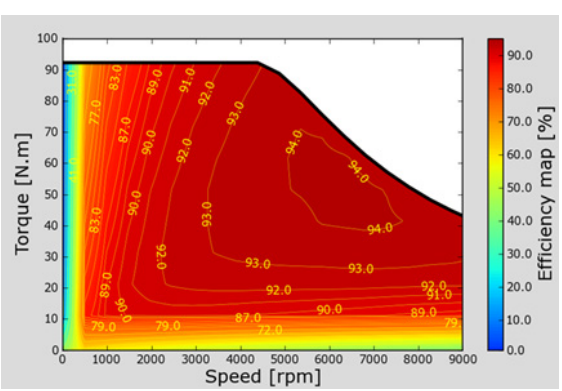

Figure 5. Electric machine efficiency map

The ANSYS electric machine design solution is unique in the simulation industry:

- Employs the most efficient numerical techniques
- Provides highly accurate, comprehensive multiphysics simulation design of an electric machine
- Includes distributed parametric analysis and HPC for robust design
- Enables power electronics and embedded control software to be simulated with a detailed finite element model

Workflow

The ANSYS integrated electric machine design methodology enables users to design, analyze and deliver efficient, optimized electric machine and drive designs. The design methodology encompasses a number of ANSYS software programs that address the many design variables involved with creating such a system.

Figure 1 shows the main design flow. The initial design stage is addressed with ANSYS RMxprt™. This specialized software allows users to quickly create a geometric model of the machine from a template-based interface, calculate its performance, and make sizing decisions. Once the initial design is completed, RMxprt creates the complete setup of the 2-D/3-D magnetic design in ANSYS Maxwell®.

Maxwell can execute rigorous performance calculations of the machine, including the motion-induced physics caused by linear translational and rotational motion, advanced hysteresis analysis, demagnetization of permanent magnets and other critical electromagnetic machine parameters. Maxwell is integrated into ANSYS Workbench™, where it can share the same CAD source with other ANSYS physics-based solvers and couple with ANSYS Mechanical™, ANSYS Fluent® or ANSYS Icepak®.

Workbench also links Maxwell to the system design optimization capability provided by ANSYS DesignXplorer™ software.

Figure 2 illustrates the optimum design scheme employed, based exclusively on the electromagnetic design flow. Narrowing the design space with RMxprt, the magnetic transient design setup is automatically generated as either 2-D or 3-D designs. The benefit of 2-D symmetry is due to the radial magnetic field topology for most electrical machines. However, axial field or transversal field topologies require 3-D designs. Nevertheless, for accuracy reasons, 3-D designs are required even if radial field topologies are considered whenever the user employs end effects, multi-axial segmented permanent magnets or skewing topologies. Although Maxwell software is a general FEA tool, its capabilities enable users to customize and apply very specific analyses for electrical machines, such as D-Q solution computation (Figure 3). Maxwell also enables users to employ even-more complex algorithms as maximum torque per ampere unit (MTPA) control strategy (Figure 4) to compute efficiency maps (Figure 5).

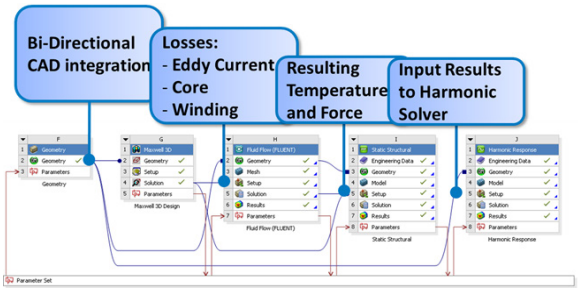

Figure 6. ANSYS Workbench coupling capabilities

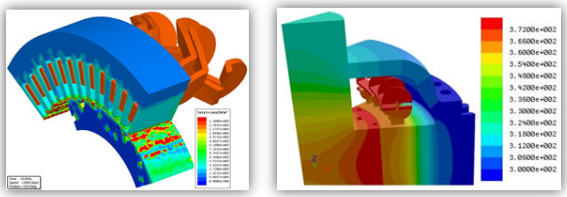

Figure 7. Averaged power loss (left) computed in ANSYS Maxwell generates thermal distribution computed in ANSYS Fluent (right) accounting for fluid dynamics.

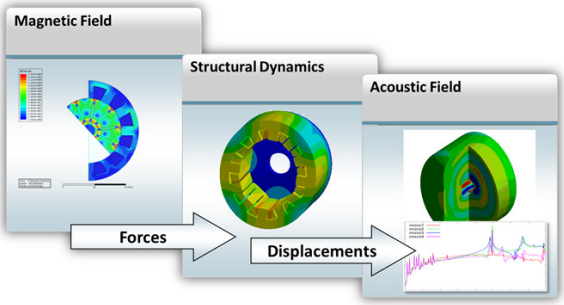

Figure 8. Vibration and acoustic noise analysis workflow

Design optimization of interior permanent magnet (IPM) machines is complicated by the fact that the maximum torque production is a function of the advance angle of the current, which, in turn, is a function of design parameters. This means that for a systematic comparison of candidate designs, a search/optimization of the optimum operating point (MTPA) has to be performed for every candidate design. The multi-objective definition can be summarized as follows: minimize torque ripple and total losses (core and copper) while maximizing torque production per unit volume at rated load.

Within ANSYS Workbench (Figure 6), ANSYS Mechanical's stress, thermal, CFD and acoustic solvers provide important multiphysics capabilities required for detailed analysis of the electric machine. Losses calculated by Maxwell can be used as inputs to the thermal or CFD solver to calculate the machine's temperature distribution (Figure 7) and to evaluate cooling strategies. Electromagnetic forces and torque calculated in Maxwell are used as inputs to the stress solver to analyze deformations and further assess potential vibrations (Figure 8).

Once the machine is designed, the Maxwell model can be integrated into ANSYS Simplorer® (Figure 9). Simplorer is a multi-domain circuit and system simulator for designing high-performance systems. At this stage, the objective is to validate the electric machine works with the electric drive and digital control system. Simplorer unites circuit simulation with block diagrams, state machines and VHDL-AMS to add power electronic circuits and controls to the motor model created by Maxwell. Additionally, the embedded software of the digital control can be incorporated through cosimulation with the Esterel SCADE suite (Figure 10).

The capability to simulate these highly complex systems at various levels of abstraction is another distinguishing feature of the ANSYS integrated electric machine design methodology.

Conclusion

The ANSYS robust electrical machine and drive design approach delivers the computational power and ease of use demanded by today's overloaded engineers. The main benefit customers receive by using ANSYS solutions is increased productivity from engineering teams, which results in:

- Shorter time to market
- Comprehensive multiphysics from a single vendor
- Robust design and optimization
- Ability to validate all aspects of the system (electric machine, power electronics, control, embedded software) prior to prototyping

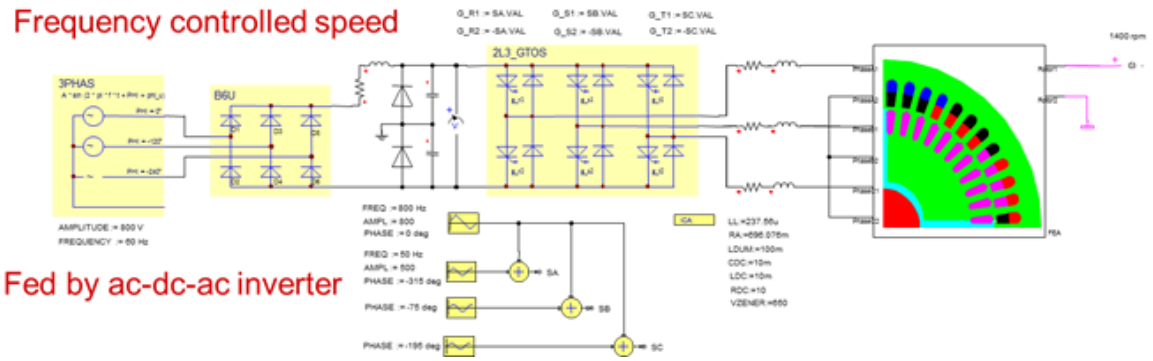

Figure 9. PWM-driven induction machine control

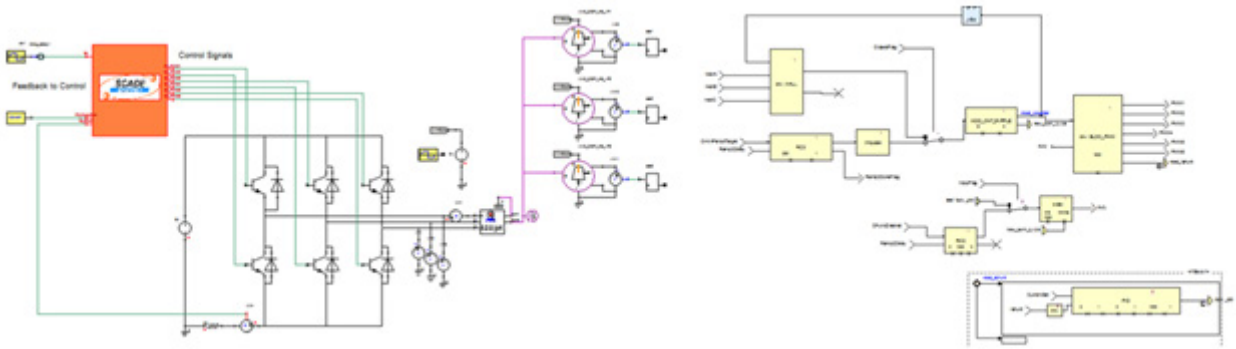

Figure 10. Software–hardware codesign

ANSYS, Inc.
Southpointe
275 Technology Drive
Canonsburg, PA 15317
U.S.A.
724.746.3304
ansysinfo@ansys.com

ANSYS, Inc. is one of the world's leading engineering simulation software providers. Its technology has enabled customers to predict with accuracy that their product designs will thrive in the real world. The company offers a common platform of fully integrated multiphysics software tools designed to optimize product development processes for a wide range of industries, including aerospace, automotive, civil engineering, consumer products, chemical process, electronics, environmental, healthcare, marine, power, sports and others. Applied to design concept, final-stage testing, validation and trouble-shooting existing designs, software from ANSYS can significantly speed design and development times, reduce costs, and provide insight and understanding into product and process performance.
Visit www.ansys.com for more information.